Specification For Approval

Spec.No. ：
File. No.：
Ver： A1
Date：2025-03-17

TGPRO New Energy Technology Co., Ltd

东莞市拓嘉新能源科技有限公司

Energy Storage Project Specification
储能项目规格书

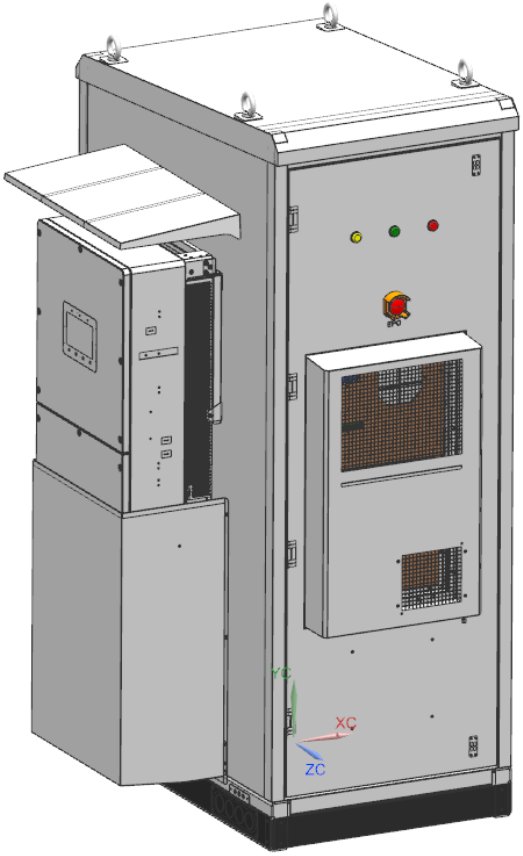

TG-eBank120F2

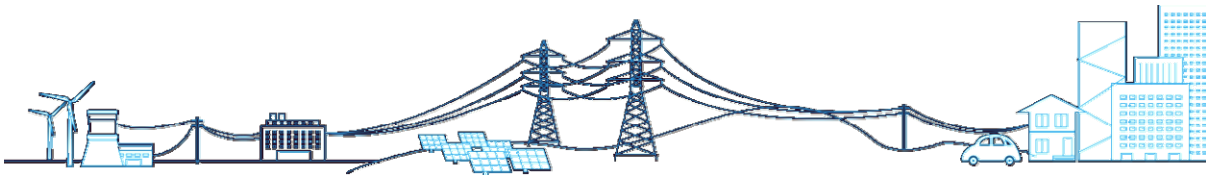

Factory address：No. 16, Hengxing Road, Liaobu Town, Dongguan City, Guangdong Province
工厂地址：广东省东莞市寮步镇横星路 16 号

History of specification

规格书修订记录

Date	Vers	Contents	Edit
2025-03-17	A0	First record 首次发行	

Specification For Approval

目录

1、Scope of application documents/文件适用范围 1

2、The Specification Amendment/ 规格书修订 1

3、Product or Cell testing conditions/ 设备产品或电芯的测试条件 1

4、Standard / 标准 1

4.1 Reference Standard/参考标准 1

4.2 Measuring Instrument and Apparatus/ 测量器具及设备 1

4.2.1 Dimension Measuring Instrument/ 尺寸测量器具 1

4.2.2 Voltmeter（伏特计） 1

4.2.3 Ammeter（安培计） 1

4.2.4 Impedance Meter（电阻计） 1

4.3 Testing Conditions (Unless Specially Requirements) 测试条件（除非特别规定） 2

5、Model Description 型号说明 2

6、Main specifications 主要技术参数 3

6.1 System Parameter 系统参数 3

6.2 Cell Battery specifications（电芯技术参数） 4

6.3 Specification for Single Cluster Battery Management System 单簇电池管理系统规范 5

6.3.1 BMS function introduction,BMS 功能介绍 5

6.3.2 BMS Protect parameter 电池管理系统保护参数 6

6.8 System schematic diagram 系统原理示意图 8

7、Appearance and structural dimensions 外观结构尺寸 9

8、Storage and Others 贮存及其它事项 10

Appendix（附录） 10

Li-ion battery operation instructions and precautions 10

锂离子电池操作指引及注意事项 10

9、其他/Others 12

Specification For Approval

1、Scope of application documents/文件适用范围

This product specification only applies to the protection parameters of rechargeable lithium-ion battery products and batteries designed by Dong guan TGPRO New Energy Technology Co., Ltd.

本产品规格书仅适用由东莞市拓嘉新能源科技有限公司设计的可充电锂离子电池产品和电池组的保护参数.

2、The Specification Amendment/ 规格书修订

If the raw materials, production processing, production system or battery usage environments & other conditions need to be changed, the amendment side needs provide the written advice to the other side, only the both sides come to agreement, the amendment will be effective.

如因原材料、生产制程 、生产系统或电池使用环境或其他条件发生改变，修订方需将改变的信息以书面形式通知对方取得供需双方同意后再行修订。

3、Product or Cell testing conditions/ 设备产品或电芯的测试条件

It is recommended to use newly produced battery packs and new cells for related tests.Unless specified, testing and measurement shall be done under temperature of 20±5℃ and relative humidity of 45~75%.

建议采用新生产的电池组和新的电芯作相关的测试。除非有特别要求，否则测试需要在温度20±5℃，相对湿度45~75%的条件下进行。

4、Standard / 标准

4.1 Reference Standard/参考标准

参考 GB 31241-2014 便携式电子产品用锂离子电池和电池组安全要求

参考 UL1642 安全标准-(锂电池)

参考 GB/T 31486-2015 电动汽车用动力蓄电池电性能要求及试验方法

参考 GB/T 31485-2015 电动汽车用动力蓄电池安全要求及试验方法

参考 GB/T 31484-2015 电动汽车用动力蓄电池循环寿命要求及试验方法

参考 VDE-AR-N 4110 储能电源系统德国并网标准要求

4.2 Measuring Instrument and Apparatus/ 测量器具及设备

4.2.1 Dimension Measuring Instrument/ 尺寸测量器具

The dimension measurement shall be implemented by instruments with equal or more precision scale of 0.02mm.

尺寸测量器具的精度等级应不小于0.02 mm。

4.2.2 Voltmeter（伏特计）

Standard class specified in the national standard or more sensitive class having inner impedance more than 10kΩ/V 按照国家标准指定规格等级或采用灵敏度更高的，测量电压时内阻不应小于 10kΩ/V。

4.2.3 Ammeter（安培计）

Standard class specified in the national standard or more sensitive class. Total external resistance including ammeter and wire is less than 0.01Ω.

按照国家标准指定规格等级或采用灵敏度更高的,包括电流表及电线在内的总外阻应小于 0.01Ω。

4.2.4 Impedance Meter（电阻计）

Impedance shall be measured by a sinusoidal alternating current method(1kHz LCR meter).

内阻测试仪测量原理应为交流阻抗法（1kHz LCR）。

4.3 Testing Conditions (Unless Specially Requirements) 测试条件（除非特别规定）

Atmosphere Pressure : 86~106kPa 大气压力: 86~106kPa

Temperature: 20℃±5℃ 环境温度: 20℃±5℃

Relative Humidity: ≤75% 环境湿度: ≤75%

5、Model Description 型号说明

Our company's product model definition rules are as follows:

我司产品型号定义规则如下:

TG-eBank-xxx□□2

1 2 3 4 5 6

Number 序号	Code Name 代码名称	Code Description 代码说明	
1	Enterprise code 企业代号	TG: TGPRO 拓嘉新能源缩写 Abbreviation of Company Name	
2	Product code 产品代号	eBank: energy Bank 能量银行	
3	Energy code 能量代号	"xxx" represents the rated energy of xxxkWh "xxx" 表示额定能量 xxxkWh	
4	Cooling method code 冷却方式代号	F: Indicating air cooling 表示风冷 L: Indicating liquid cooling 表示液冷	
5	Inverter configuration code 逆变器配置代号	**Empty**: grid connected **S**: grid connected with PV **PGF**: Grid connected and off grid **PGFS**: Grid connected and off grid with PV **HYB**: Grid connected and off grid with PV with Gen	**空**：并网 **S**：并网带光伏 **PGF**：并离网 **PGFS**：并离网带光伏 **HYB**：并离网带光伏带柴发
6	Code for backup power duration 备电时长代号	"2" indicates that the energy storage backup time is 2 hours "2" 表示储能备电时长为 2h	

6、Main specifications 主要技术参数

6.1 System Parameter 系统参数

No	Item（项目）	TG-eBank-120F
1	system energy 系统能量	160.768KWh
2	Rated Capacity 额定容量	314Ah
3	Output Voltage range 输出电压范围	400-584Vdc
4	Factory Voltage 出货电压	512V-528Vdc
5	Recommended Voltage at end of Discharge 推荐放电终止电压	≤432Vdc
6	Recommended charging voltage 推荐充电电压	560Vdc
7	Max Charging Current(Icm) 允许最大持续充电电流	157A
8	Limited Charging Voltage(Ucl) 充电限制电压	584Vdc
9	Max Discharging current 最大持续放电电流	157A
10	Discharge Cut-off voltage(Udo) 放电截止电压	400Vdc
11	Inverter 逆变器	Customers purchase on their own 客户自行购买
12	Cooling method 冷却方式	air-cooled air conditioning 空调风冷
13	Placement environment 放置环境	Outdoor(Suggest a cool and ventilated place) 室外(建议阴凉通风处)
14	Size 尺寸	W1200*D1250*H2050mm (Excluding inverter cover 不含逆变器罩)
15	Weight 重量	1400±100kg
16	Fire Protection System 消防系统	Have 有
17	protection grade 防护等级	IP54
18	Operating temperature (℃) 工作温度（℃）	charge:0～55℃/discharge：-20～50℃ 充电：0～55℃/放电：-20～50℃
19	Relative humidity 相对湿度	0 ~95%（non-condensing） 0 ~95%（非冷凝）
20	Operating altitude 工作高度	3000m

6.2 Cell Battery specifications（电芯技术参数）

No	Item（项目）	General Parameter 常规参数	Remark（备注）
1	Rated Capacity 额定容量	314Ah	Standard discharge after Standard charge, we recommend 0.2C charge and 0.5C discharge 标准充电后标准放电，推荐 0.2C 充 0.5C 放。
2	Nominal Voltage 平台电压	3.2V	Mean Operation Voltage 平台电压
3	Internal Impedance 内阻	≤0.18mΩ	Under 20±5℃ Environment Temperature , the Usage Frequency of Fully Charge(1KHz) , Use AC Internal Impedance test machine to test 20±5℃环境温度下，完全充电后使用频率为（1kHz）的交流内阻测试仪测量。
4	Standard charge 标准充电	157A	Constant Current 0.5C_5A，Constant Voltage 3.6V，0.02C_5A cut-off 恒流 0.5C5A，恒压 3.6V，截止 0.02C5A
5	Rapid Charge 快速充电	157A	Constant Current 1C_5A，Constant Voltage 3.6V，0.02C_5A cut-off 恒流 1C5A，恒压 3.6V，0.02C5A 截止
6	Standard Charge Cut-off Voltage 标准充电截止电压	3.65V	Voltage of the battery when the Charge is stopped 按电芯充电达到满电时停止的电压值
7	Standard Discharge Cut-off Voltage 标准放电截止电压	2.5V	Voltage of the battery when the discharge is stopped 按电芯平台放电达到放电截止的电压值
8	Standard discharge 标准放电	157A	Constant current 0.5C end voltage 2.5 V 恒流 0.5C 端电压 2.5V
9	Maximum discharge current 最大放电持续电流	157A	Constant current：1C_5A end voltage：2.5 V 恒流：1C5A 端电压：2.5V
10	Dimension 尺寸	Thickness/厚度:71.7±0.5mm	
		Width/宽度：173.7±0.5mm	
		Height/高度：207.2±0.6mm	
11	Weight 重量	5.6±0.3kg	
12	Operating Temperature Range 工作温度范围	Temperature:-30~55℃，Humidity： ≤60±25%RH	
13	Storage Temperature Range 储存温度范围	-30℃~60℃	

6.3 Specification for Single Cluster Battery Management System 单簇电池管理系统规范

6.3.1 BMS function introduction,BMS功能介绍

1）:BMS is designed for high-voltage energy storage series lithium batteries
BMS 是为高压储能系列锂电池设计的

2）: The BMS have all functions which are :
该 BMS 系统具有以下一些功能

.1 overcharge detection function
过充电保护功能

.2 over discharge detection function
过放电保护功能

.3 over current detection function
过电流保护功能

.4 short detection function
短路保护功能

.5 Temperature detection function
温度保护功能

.6 balance function
均衡功能

.7 communicate function
通讯功能

.8 Alarm function
告警功能

.9 Total capacity function
总容量功能

.10 Storage history function
存储历史记录功能

6.3.2 BMS Protect parameter 电池管理系统保护参数

Items 项目	Details 标准	General Parameter 常规参数
Cell overcharge Protection 电池过度充电保护	Overcharge detection voltage 过充电检测电压	3.65±0.025V
	Overcharge detection delay time 过充电检测延迟时间	Typical:1.0s
	Overcharge release voltage 过充电释放电压	3.4±0.05V
Cell over-discharge protection 电池过放电保护	Over-discharge detection voltage 过放电检测电压	2.7±0.5V
	Over-discharge detection delay time 过放电检测延迟时间	Typical:1.0s
	Over-discharge release voltage 过放电释放电压	3.1±0.1V or charge release
Over-current Protection 过电流保护	discharge Over-current protection current1 放电过电流保护电流 1	162A
	discharge Over-current detection delay time 1 放电过电流检测延迟时间 1	1S
	discharge Over-current protection current 2 放电过电流保护电流 2	167A
	discharge Over-current detection delay time 2 放电过电流检测延迟时间 2	≤200m±50ms
	Charge Over-current protection current 充电过电流保护电流	162A
	Protection condition 保护条件	Load short 负载短路
	Detection delay time 检测延迟时间	≤30ms
	Protection release condition 保护释放条件	Charging release 充电释放
Temperature(T) protection 温度（T）保护	Charge high T protection 充电高 T 保护	55±3℃
	Charge high T recover 充电高 T 恢复	47±4℃
	Discharge high T protection 放电高 T 保护	60±3℃
	Discharge high T recover 放电高 T 恢复	50±4℃
	Charge low T protection 充电低 T 保护	0±3℃

	Charge low T recover 充电低 T 恢复	5±4℃
	Discharge low T protection 放电低 T 保护	-20±3℃
	Discharge low T recover 放电低 T 恢复	-10±4℃
Balance 平衡	Balance threshold voltage 平衡阈值电压	3.4V
Communication 通信	It has CAN and RS485 ,RS232 standard communication interface, it real-time monitoring the capacity of battery bank, the voltage, current,environment temperature, and charging/discharging current, RS485,RS232,Baud rate:9600Kb/S,CAN common Baud rate:500K/S, 它具有 CAN 和 RS485、RS232 标准通信接口，实时监测电池组的容量、电压、电流、环境温度和充放电电流， RS485、RS232，波特率：9600Kb/S，CAN 普通波特率：500K/S，	
Alarm 警报	It has over-temperature, over charge, under-voltage, over-current, short circuit alarm Function. 具有超温、过充、欠压、过流、短路报警功能。	

6.8 System schematic diagram 系统原理示意图

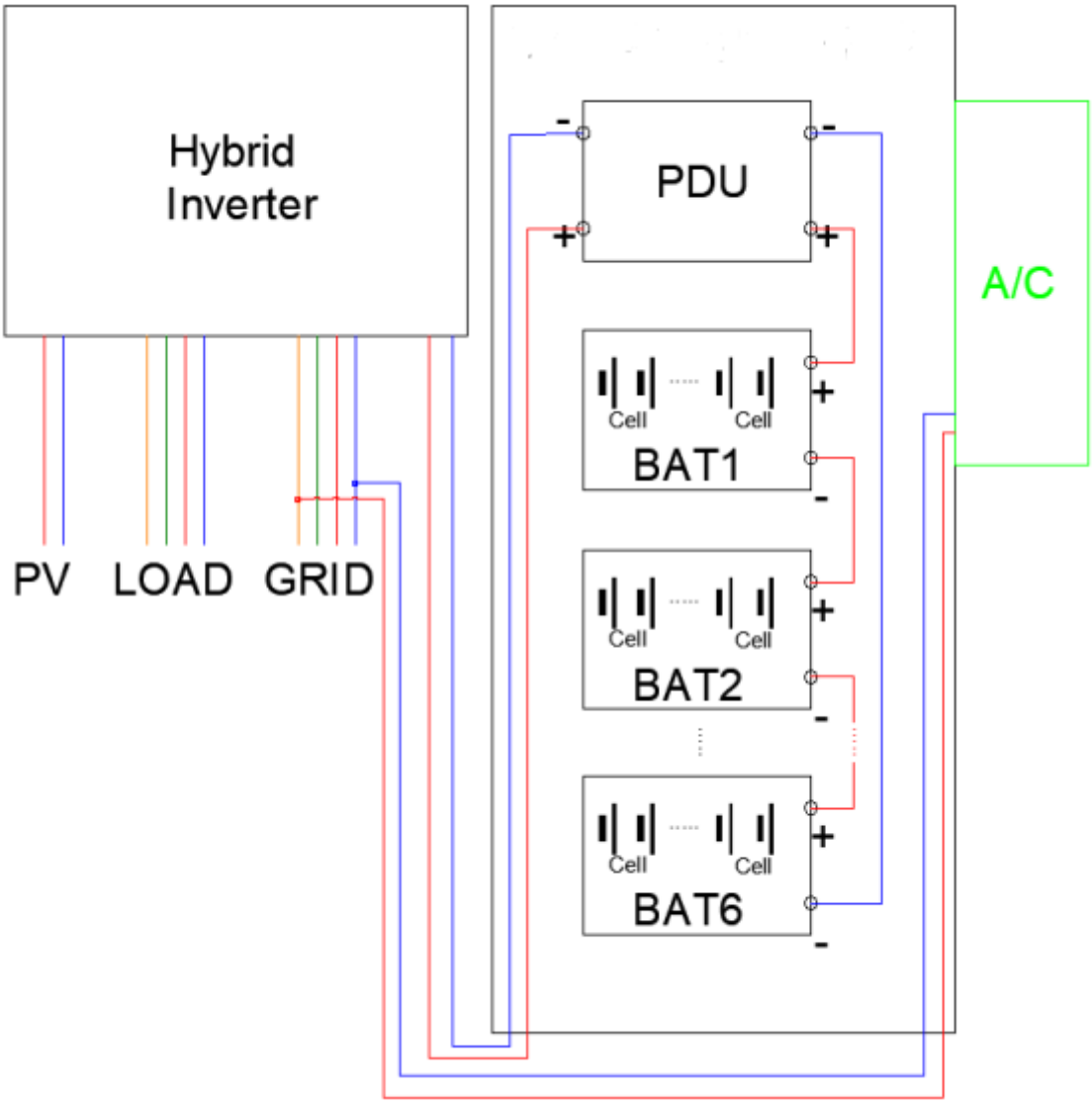

BMS adopts a secondary architecture distributed scheme to communicate with the superior control system through the CAN bus, mainly composed of the following key components:
BMS 采用二级架构分布式方案，通过 CAN 总线与上级控制系统通信，主要由以下关键部件组成：

Main Battery Management Unit (BCM), integrated control and insulation detection module， Battery Monitoring Unit (BMM)
主蓄电池管理单元（BCM）、集成控制和绝缘检测模块、电池监测单元（BMM）

7、Appearance and structural dimensions 外观结构尺寸

The surface of the battery pack should have no obvious scratches, burrs and mechanical scratches, and the exposed metal terminals should be free of oxidation and rust.电池组的表面应无明显的划痕毛刺和机械划伤，外露的金属端子应无氧化生锈。

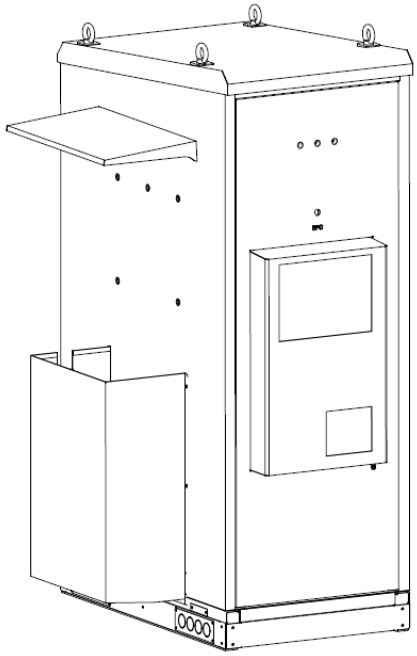

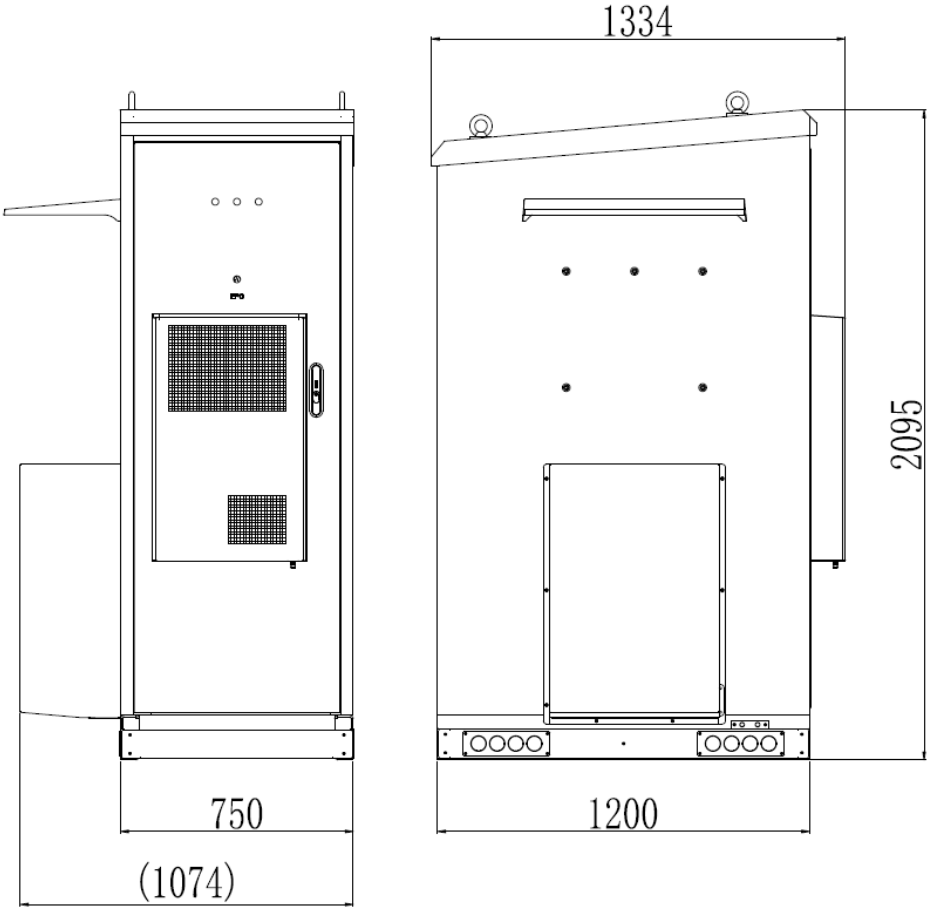

8、Storage and Others 贮存及其它事项

Long Time Storage 长期贮存

If stored for a long time(don’ t used,exceed three months), the cell and pack should be stored in drying and cooling place. The PACK is to be stored in a condition that the temperature of 23±2℃ and the humidity Of 45%- 75%. Long-term use of unused batteries to recharge every 3 months。Ensure that the battery voltage is within the above range。

长期贮存的电池（未使用,超过 3 个月）须置于干燥、凉爽处。PACK 应储存在温度 23±2℃，湿度 45%- 75% 的条件下。长期搁置未使用电池每 3 个月补电一次，确保电池电压在上述范围内。

Appendix（附录）

Li-ion battery operation instructions and precautions
锂离子电池操作指引及注意事项

Preface 前言

This document of ’Handling Precautions and Guideline Li-ion Rechargeable Batteries’ shall be applied to the battery cells manufactured by TGPRO.

本檔“锂离子充电电池操作指示及注意事项”仅适用于东莞市拓嘉新能源科技有限公司生产电池。

Note (1) ：声明一

The customer is requested to contact TGPRO New Energy Technology Co., Ltd.. in advance, if and when the customer needs other applications or operating conditions than those described in this document. Additional experimentation may be required to verify performance and safety under such conditions.

客户若需要将电池用于超出本规格书规定以外的设备，或在本规格书规定以外的使用条件下使用电池，应事先联系东莞市拓嘉新能源科技有限公司，因为需要进行特定的实验测试以核实电池在该使用条件下的性能及安全性。

Note (2) ：声明二

TGPRO New Energy Technology Co., Ltd. will take no responsibility for any accident when the cell is used under other conditions than those described in this Document.

对于在超出本规格书规定以外的条件下使用电池而造成的任何意外事故，东莞市拓嘉新能源科技有限公司概不负责。

Note (3)：声明三

TGPRO New Energy Technology Co., Ltd. will inform, in a written form, the customer of improvement(s) regarding proper use and handling of the cell, if it is deemed necessary.

如有必要，东莞市拓嘉新能源科技有限公司会以书面形式告知客户有关正确操作使用电池的改进措施。

Caution!注　意！

Do not use or store the battery where is exposed to extremely hot, such as under window of a car in direct sunlight in a hot day. Otherwise, the battery may be overheated. This can also reduce battery performance and/or shorten service life, Cause personal injury 。

不要使用处于极热环境中的电池，如阳光直射或热天的车内。否则，电池会过热，可能着火（点燃），这样就会影响电池的性能、缩短电池的使用寿命，产生人身伤害

If the electrolyte enters the eyes after the battery leaks, do not wipe it, rinse with clean water, and seek medical help immediately.如果电池漏液后电解液进入眼睛，不要擦，应用清水冲洗，并立即寻求医疗救助。

Danger!

— Do not immerse the battery in water or allow it to get wet.
— 勿将电池投入水中或将其弄湿！
— Do not use or store the battery near sources of heat such as a fire or heater.
— 禁止在火源或极热条件下给电池充电！勿在热源（如火或加热器）附近使用或贮存电池！如果电池泄漏或发出异味，应立即将其从接近明火处移开；
— Do not use any chargers other than those recommended by TGPRO.
— 请使用专用充电器！
— Do not reverse the positive(+) and negative(-) terminals.
— 勿将正负极接反！
— Do not connect the battery directly to wall outlets or car cigarette-lighter sockets.
— 勿将电池直接连接到墙上插座或车载点烟式插座上！
— Do not put the battery into a fire or apply direct heat to it.
— 勿将电池投入火中或给电池加热！
— Do not short-circuit the battery by connecting wires or other metal objects to the positive(+) and negative(-) terminals.
— 禁止用导线或其它金属物体将电池正负极短路，禁止将电池与项链、发夹或其它金属物体一起运输或贮存！
— Do not pierce the battery casing with a nail or other sharp object, break it open with a hammer, or step on it.
— 禁止用钉子或其它尖锐物体刺穿电池壳体，禁止锤击或脚踏电池！
— Do not strike, throw or subject the battery to sever physical shock.
— 禁止撞击、投掷或者使电池受到机械震动
— Do not directly solder the battery terminals.
— 禁止直接焊接电池端子！
— Do not attempt to disassemble or modify the battery in any way.
— 禁止以任何方式分解电池！
— Do not place the battery in a microwave oven or pressurized container.
— 禁止将电池置入微波炉或压力容器中！
— Do not use the battery in combination with primary batteries(such as dry-cell batteries) or batteries of different capacity, type or brand.
— 禁止与一次电池（如干电池）或不同容量、型号、品种电池组合使用！
—Do not use the battery if it gives off an odor, generates heat, becomes discolored or deformed, or appears abnormal in any way. If the battery is in use or being recharged, remove it from the device or charger immediately and discontinue use.
— 如果电池发出异味、发热、变形、变色或出现其它任何异常现象时不得使用；如果电池正在使用或充电，应立即从用电器中或充电器上取出并停止使用！

9、其他/Others

（1）任何一方均不得将本技术协议的内容向第三方泄漏，否则守约方有权追究违约方的违约责任。
Neither party shall disclose the contents of this technical Agreement to any third party, otherwise the non-breaching party shall have the right to hold the breaching party liable for breach of contract.

（2）因履行本协议所发生的争议，双方应协商解决，协商不成的，应向协议签订地有管辖权的人民法院提起诉讼。
Any dispute arising from the performance of this Agreement shall be settled by both parties through negotiation. If no agreement can be reached through negotiation, the parties shall file a lawsuit with the people's court with jurisdiction at the place where this Agreement is signed.

（3）本协议及附件未尽事宜，双方另行协商。
Matters not covered in this Agreement and the Annex shall be negotiated by both parties separately.

（4）本协议书(包含附件)一式两份，甲乙双方各执一份，自双方签字盖章后生效。
This Agreement (including the attachments) is made in duplicate, with each party holding one copy. The Agreement shall come into force after being signed and sealed by both parties.

甲方（Supplier）：	**乙方（Customer）：**
签字（Sign）：	**签字（Sign）：**
日期（Date）：	**日期（Date）：**